ECE 274 – Digital Logic
Homework Assignment 5
Due December 5 *(beginning of class)*

1.) *(10 points)* Define the terms "optimization" and "tradeoff," and provide everyday examples of each.

2.) *(10 points)* Perform two-level logic size optimization for the function `F(a,b,c) = b + a'b'c + b'c` using a K-map. Express the answer as sum-of-products.

3.) *(10 points)* Perform two-level logic size optimization for the function `F(a,b,c,d) = a'bc'd + ab'cd'`, assuming that `a` and `b` can never both be `1` at the same time, and that `c` and `d` can never both be `1` at the same time (i.e., there are don't cares).

4.) *(10 points)* For the function `F(a,b,c) = a'c + ac + a'b`, determine all prime implicants and all essential prime implicants of the function.

5.) *(10 points)* Use repeated application of the expand operation to heuristically minimize the function `F(a,b,c) = a'b'c + a'bc + abc`. Try expanding each term for each variable. Give the minimized function in sum-of-products form.

6.) *(10 points)* Convert the following Mealy FSM to the nearest Moore equivalent.

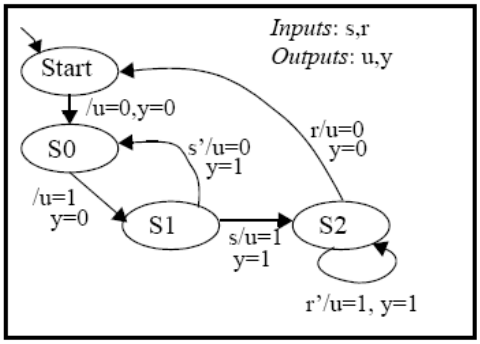

7.) *(10 points)* Trace the execution of the 4-bit carry-lookahead adder when `a = 11` and `b = 7`.

8.) *(10 points)* Show how to implement on a 3-input 2-output lookup table the function `F(a,b,c)= a + bc`.

9.) *(10 points)* Show the bitfile necessary to program the FPGA fabric shown below to implement the function `F(a,b,c,d) = abcd`, where `a`, `b`, `c` and `d` are external inputs.

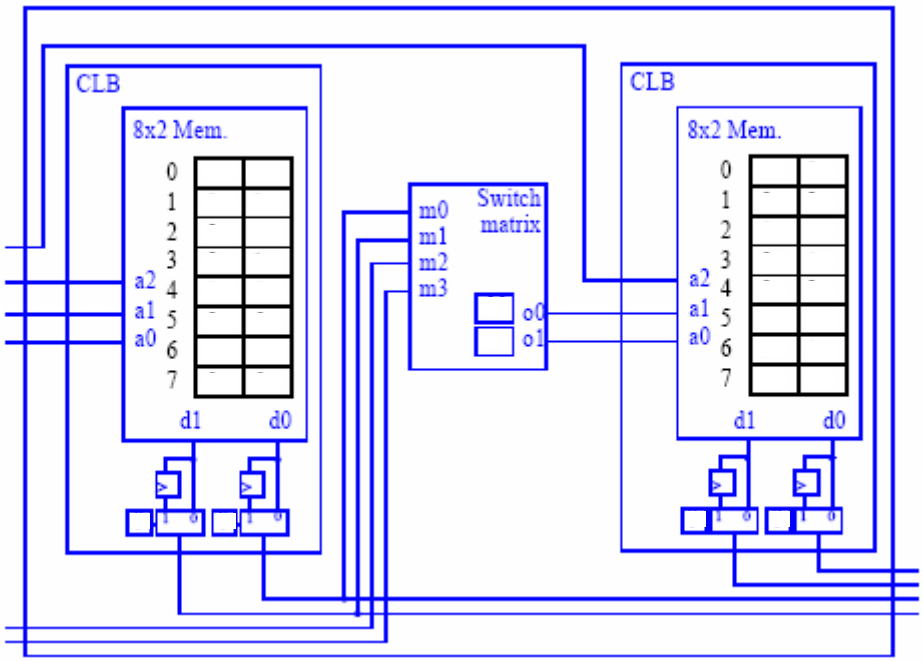

10.) *(10 points)* For each of the system constraints below, choose the most appropriate technology from among FPGA, standard cell, and full-custom IC technologies for implementing a given circuit. Justify your answers.

a. The system must exist as a physical prototype by next week.
b. The system should be as small and low-power as possible. Short design time and low cost are *not* priorities.
c. The system should be reprogrammable even after the final product has been produced.
d. The system should be as fast as possible and should consume as little power as possible, subject to being completely implemented in just a few months.
e. Only five copies of the system will be produced and we have no more than $1,000 to spend on all the ICs.