ECE 274 – Digital Logic
Homework Assignment 3
Due October 21 *(beginning of class)*

1.) *(5 points)* Trace the behavior of an 8-bit parallel load register with input I, output Q, and load control input *ld* by completing the following timing diagram.

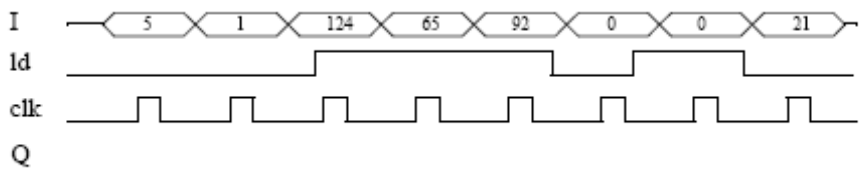

2.) *(5 points)* Design an 8-bit register with 2 control inputs s1 and s0, 8 data inputs I7..I0, and 8 data outputs Q7..Q0. s1s0=00 means maintain the present value, s1s0=01 means load, and s1s0=10 means clear. s1s0=11 means to swap the high nibble with the low nibble (a nibble is 4 bits), so 11110000 would become 00001111, and 11000101 would become 01011100.

3.) *(5 points)* Assuming all gates have a delay of 1, compute the time required to add two numbers using an 8-bit carry-ripple adder.

4.) *(5 points)* Design a digital thermometer that can compensate for errors in the temperature sensing device's output T, which is an 8-bit input to our system. The compensation amount can be positive only, and comes to our system via inputs a, b and c, from a 3-pin DIP switch. Our system should output the compensated temperature on an 8-bit output U.

5.) *(5 points)* Design a circuit that outputs the average of four 8-bit inputs

6.) *(5 points)* Trace through the execution of the barrel shifter shown below, when I=01100101, x = 1, y = 0, z = 1. Be sure to show how the input I is shifted at each stage.

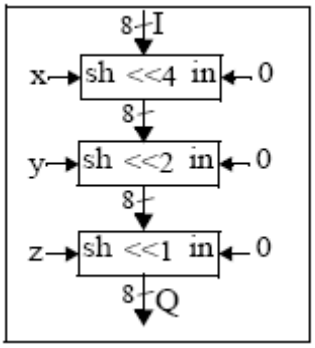

7.) *(5 points)* Using the barrel shifter shown above, what settings of the inputs x, y, and z are required to shift the input I six positions.

8.) *(5 points)* Design a 5-bit magnitude comparator.

9.) *(10 points)* Design a circuit that outputs 1 if the circuit's 8-bit input equals 99: (a) using an equality comparator, (b) using gates only. *Hint*: In this case, you need only 1 AND gate and some inverters.

10.) *(10 points)* Design a 4-bit up/down-counter that has four control inputs: *cnt_up* enables counting up, *cnt_down* enables counting down, *clear* synchronously resets the counter to all 0s, and *set* synchronously sets the counter to all 1s. If both count control inputs *cnt_up* and *cnt_down* are 1, the counter will retain its current count value.

11.) *(10 points)* Design an 8-bit multiplier.

12.) *(5 points)* Convert the following two's complement binary numbers to decimal numbers:
a. 00001111
b. 10000000
c. 10000001
d. 11111111
e. 10010101

13.) *(5 points)* Convert the following decimal numbers to 8-bit two's complement binary form:
a. 6
b. 26
c. -8
d. -30
e. -60
f. -90
g. -120

14.) *(10 points)* Design an ALU with two 8-bit inputs A and B, and control signals x, y, and z. The ALU should support the operations described in the following table. Use an 8-bit adder an arithmetic/logic extender.

Inputs			Operation
x	y	z	
0	0	0	S = A - B
0	0	1	S = A + B
0	1	0	S = A * 8
0	1	1	S = A / 8
1	0	0	S = A NAND B (bitwise NAND)
1	0	1	S = A XOR B (bitwise XOR)
1	1	0	S = Reverse A (bit reversal)
1	1	1	S = NOT A (bitwise complement)

15.) *(10 points)* Design an 8x32 two port (1 read, 1 write) register file.