Proposal to Achieve 1 Tb/s per Wavelength Transmission Using Three-Dimensional LDPC-Coded Modulation

Hussam G. Batshon, *Student Member, IEEE*, Ivan B. Djordjevic, *Member, IEEE*, Lyubomir L. Minkov, Lei Xu, Ting Wang, and Milorad Cvijetic

***Abstract*—We propose a three-dimensional (3-D) low-density parity check (LDPC)-coded modulation scheme that enables optical transmission beyond 320 Gb/s in aggregate rate using currently available commercial components operating at 40 giga-symbols/s. The proposed scheme introduces significant performance improvement of up to 4.1 dB at a bit-error ratio of 10^{-9} over the corresponding two-dimensional scheme. In addition, by using LDPC-coded 1024-3D-constellation it is possible, at least in theory, to achieve beyond a total of 1-Tb/s transmission using transmission equipment operating at 100 giga-symbols/s, once it reaches the maturity of 40-Gb/s systems.**

***Index Terms*—Coherent detection, high-speed optical transmission, low-density parity-check (LDPC) codes, 100G Ethernet, optical communications, three-dimensional (3-D) coded modulation (CM).**

I. Introduction

OPTICAL communication systems are evolving quickly to adapt to the ever-increasing demands of telecommunication needs, most noticeably witnessed by the explosive growth in transmission capacity demands. The all-electrical time-division-multiplexed (ETDM) transmitters and receivers operating at 100 Gb/s are gradually becoming commercially available. The major concern about such high data rates is the degradation in the signal quality due to linear and nonlinear impairments, in particular polarization-mode dispersion and intrachannel nonlinearities. Moreover, the 100-Gb/s transceivers are expensive so that the alternative approaches of achieving beyond 100-Gb/s transmission using commercially available components operating at lower speed are becoming increasingly important.

In this letter, we propose a three-dimensional (3-D) low-density parity-check (LDPC)-coded modulation (3D-LDPC-CM) scheme enabling even beyond an aggregate rate of 320-Gb/s transmission using commercially available components operating at 40 giga-symbols/s. In order to achieve that rate, we employ the following three concepts: 1) an additional (third) basis function for the signal constellation is introduced; 2) to facilitate the implementation process, a structured LDPC code [1] is employed; and 3) to improve performance an iterative exchange of the *extrinsic* soft bit-reliabilities between an *a posteriory probability* (APP) demapper and an LDPC decoder is conducted. The additional basis function increases the Euclidean distance between the signal constellation points for the same average power per constellation point compared to an equivalent M-ary two-dimensional (2-D) constellation, leading to the improved bit-error-ratio (BER) performance. The 3D-LDPC-CM offers an improvement of up to 4.1 dB over the corresponding 2-D modulation scheme, and provides up to 14-dB overall net effective gain at BER 10^{-9}. The LDPC(8547,6922) code of rate 0.8098, employed in this letter, belongs to the class of balanced-incomplete block-design (BIBD)-based LDPC codes of girth-8 [2].

This scheme can be used either in high-speed optical transmission systems to achieve $N \times 40$-Gb/s aggregate rate $(N = 4, 16, \ldots)$ or in the next generation of Ethernet. Traditionally the Ethernet has grown in ten-fold increments so that 100-Gb/s transmission is envisioned as transmission technology for 100G Ethernet [3]–[5]. Moreover, the proposed coded-modulation scheme employing 1024-3D-constellation can also achieve a 1-Tb/s rate using transmission equipment operating at 100 giga-symbols/s, once it reaches the maturity of current 40-Gb/s systems.

II. 3D-LDPC-CM

The transmitter and receiver configurations are shown in Fig. 1. The bit streams coming from m different information sources (carrying, for example, 40-Gb/s traffic) are encoded using identical (n, k) LDPC codes (of code rate $r = k/n$, k—the number of information bits, n—the codeword length), and written to the $m \times n$ block-interleaver row-wise. The mapper accepts m bits at time instance i from the $(m \times n)$ interleaver column-wise and determines the corresponding M-ary $(M = 2^m)$ signal constellation point $\boldsymbol{s}_i = (\phi_{1,i}, \phi_{2,i}, \phi_{3,i}) = |\boldsymbol{s}_i| \exp(j\varphi_i)$, as shown in Fig. 1(a). With Φ_1, Φ_2, and Φ_3, we denoted the orthonormal basis functions given by

$$\Phi_1(t) = \frac{1}{\sqrt{T}} \sin\left(\frac{2\pi t}{T}\right)$$
$$\Phi_2(t) = \frac{1}{\sqrt{T}} \cos\left(\frac{2\pi t}{T}\right)$$
$$\Phi_3(t) = \frac{1}{\sqrt{T}} \tag{1}$$

Manuscript received December 13, 2007; revised January 22, 2008. This work was supported in part by NEC Laboratories America, and in part by the National Science Foundation (NSF) under Grant IHCS 0725405.

H. G. Batshon, I. B. Djordjevic, and L. L. Minkov are with the Department of Electrical and Computer Engineering, University of Arizona, Tucson, AZ 85721 USA (e-mail: hbatshon@ece.arizona.edu; ivan@ece.arizona.edu; ljubo@e-mail.arizona.edu).

L. Xu and T. Wang are with NEC Laboratories America, Princeton, NJ 08540 USA (e-mail: leixu@nec-labs.com; ting@nec-labs.com).

M. Cvijetic is with NEC Corporation of America, Herndon, VA 20171 USA (e-mail: Milorad.Cvijetic@necam.com).

Color versions of one or more of the figures in this letter are available online at http://ieeexplore.ieee.org.

Digital Object Identifier 10.1109/LPT.2008.920024

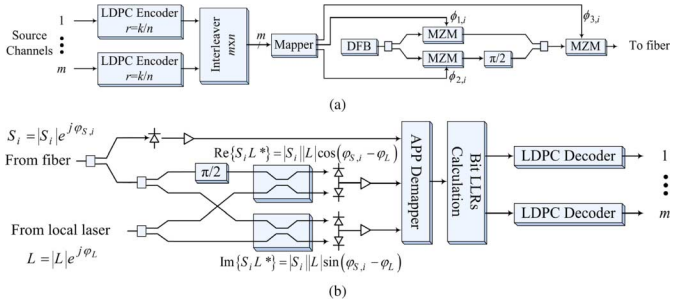

Fig. 1. Three-dimensional bit-interleaved LDPC-CM scheme: (a) transmitter architecture, and (b) coherent detection receiver architecture.

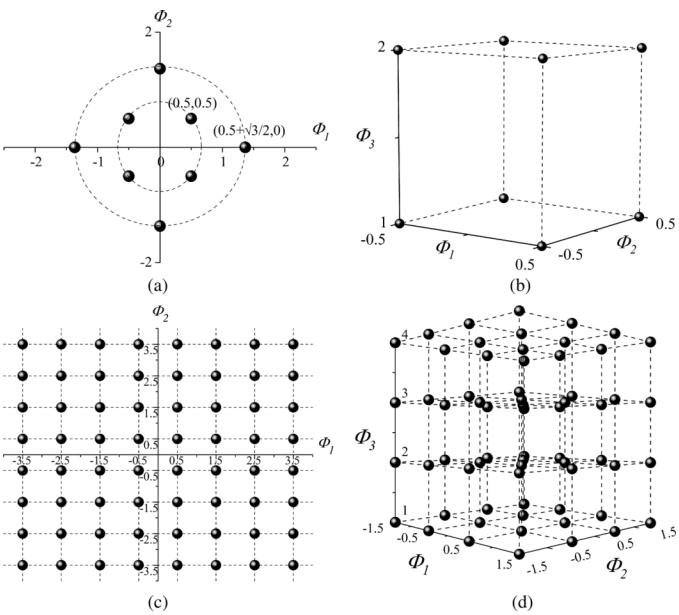

Fig. 2. Constellation diagrams under study: (a) 8 point—2D constellation, (b) 8 point—3D, (c) 64 point—2D, and (d) 64 point—3D.

for $0 \leq t \leq T$, and zero otherwise, where T is a symbol duration.

To facilitate implementation at high speed, the 3-D M-ary constellation is formed using parallel identical 2-D signal-constellation points layers spaced apart at distance a. The amplitude coordinate ϕ_3 corresponds to the layer index, and it is determined by the l left-most bits of the symbol $\boldsymbol{c} = (c_1, c_2, \ldots, c_m)$. The coordinates ϕ_1 and ϕ_2 correspond to the location of the constellation point within the layer, and are determined by $m - l$ right-most bits. The amplitude coordinate ϕ_3 cannot be set to zero as the phase coordinates ϕ_1 and ϕ_2 will be cancelled. As an illustration of the bit arrangements, let us observe the 64-ary 3D-constellation, in which each symbol carries 6 bits. Possible arrangements of the bits include: 1) 64 constellation points are split into two 32 2-D layers ($l = 1$); 2) 64 constellation points are split into four 16-point layers $l = 2$; etc.

Two easy to implement 3-D signal constellations for 8-ary and 64-ary transmission, and the corresponding 2-D quadrature amplitude modulation (QAM) signal constellations are given in Fig. 2. In those cases, by using a 40-giga-symbols/s symbol rate, we can achieve a rate of 120 Gb/s using 8-QAM constellation, while by using 64-3D constellation we can achieve 240-Gb/s aggregate rate, and by using 1024-3D constellation and the same symbol rate we can achieve 400-Gb/s aggregate rate.

The receiver shown in Fig. 1(b) is a hybrid receiver; we use direct detection for the amplitude ϕ_3, while we prefer the use of coherent detection for ϕ_1 and ϕ_2 in order to avoid differential detection penalty. The received electrical field at the ith transmission interval is denoted by $S_i = |S_i|e^{j\varphi_{S,i}}$, $\varphi_{S,i} = \varphi_i + \varphi_{S,\mathrm{PN}}$, where the data phasor

$$\varphi_i \in \left\{0, \frac{2\pi}{2^{m-l}}, \ldots, \frac{2\pi(2^{m-l}-1)}{2^{m-l}}\right\} \tag{2}$$

and $\varphi_{S,\mathrm{PN}}$ denotes the laser phase noise process of transmitting laser. The local laser electrical field is denoted by $L = |L|e^{j\varphi_L}$, where φ_L is the laser phase noise process of the local laser. The amplitude detection branch has an output that is proportional to $|S_i|^2$. On the other hand, the outputs of upper- and lower-balanced branches are proportional to $\mathrm{Re}\{S_i L^*\}$ and $\mathrm{Im}\{S_i L^*\}$, as given by

$$\mathrm{Re}\{S_i L^*\} = |S_i||L|\cos(\varphi_i + \varphi_{S,\mathrm{PN}} - \varphi_L)$$

and

$$\mathrm{Im}\{S_i L^*\} = |S_i||L|\sin(\varphi_i + \varphi_{S,\mathrm{PN}} - \varphi_L). \tag{3}$$

The outputs of the three branches are sampled at symbol rate and corresponding samples are forwarded to the APP demapper, which provides the bit log-likelihood ratios (LLRs) required for iterative LDPC decoding. The symbol LLRs are calculated in the APP demapper by

$$\lambda(\boldsymbol{s}_i) = \log \frac{P(\boldsymbol{s}_i = \boldsymbol{s}_0|\boldsymbol{r}_i)}{P(\boldsymbol{s}_i \neq \boldsymbol{s}_0|\boldsymbol{r}_i)} \tag{4}$$

where $P(\boldsymbol{s}_i|\boldsymbol{r}_i)$ is determined by Bayes' rule as

$$P(\boldsymbol{s}_i|\boldsymbol{r}_i) = \frac{P(\boldsymbol{r}_i|\boldsymbol{s}_i)P(\boldsymbol{s}_i)}{\sum_{\boldsymbol{s}'} P(\boldsymbol{r}_i|\boldsymbol{s}'_i)\,P(\boldsymbol{s}'_i)}. \tag{5}$$

In (4) and (5), $\boldsymbol{s}_i = (\phi_{1,i}, \phi_{2,i}, \phi_{3,i})$ denotes the transmitted signal constellation point, $\boldsymbol{r}_i = (r_{1,i}, r_{2,i}, r_{3,i})$ denotes the received constellation point (the samples at APP demapper input), and $P(\boldsymbol{r}_i|\boldsymbol{s}_i)$ denotes conditional probability estimated from histograms. (In (4), $\boldsymbol{s}_0$ denotes the referent constellation point.) The bit LLRs required for LDPC decoding are calculated in a bit LLRs calculation block [see Fig. 1(b)], as explained in [6].

The extrinsic LLRs of the LDPC decoder (defined as the difference between decoder input and output LLRs) are then forwarded to the APP demapper (this step is denoted as an *outer iteration*), and the extrinsic information is iterated forward and back until the convergence or until a predefined number of iterations has been reached. Extrinsic information transfer (EXIT) chart analysis [6], [7] has been used to select suitable LDPC codes for use in the proposed coded-modulation scheme.

As mentioned in Section I, the LDPC(8547,6922) code employed in simulations is a girth-8 LDPC code designed using the concept of BIBDs [2]. The LDPC decoder is based on a min-sum-with-correction-term algorithm due to Xiao-Yu *et al.* [3].

III. Simulation Results

The simulations are performed on a linear channel model, with a signal bandwidth of 49.5 GHz (symbol rate/code rate), for 30 iterations of sum-product algorithm for the LDPC decoder, and either 1 or 5 *outer iterations* between the LDPC decoder and

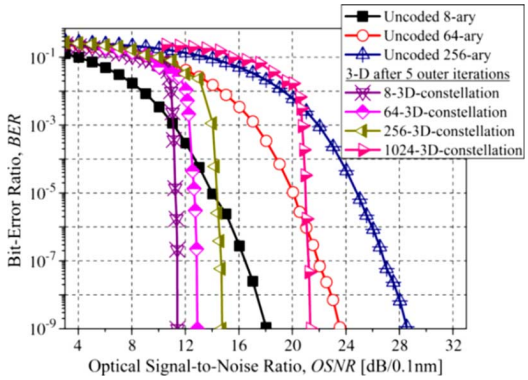

Fig. 3. BER performance of the 3D-LDPC-CM schemes after five outer iterations and the uncoded ones.

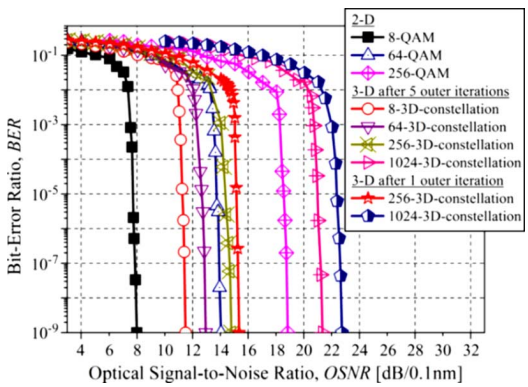

Fig. 4. BER performance of 2D- and 3D-LDPC-CM schemes.

the natural demapper. The *outer iterations* help further improve the BER performance, without compromising the complexity of the system. In our recent work [8], it has been shown that the multilevel coded modulation schemes can operate in the presence of fiber nonlinearities. The main purpose of this letter is to show how to improve the spectral efficiency and coding gain of the corresponding 2-D scheme.

The following signal constellation formats are observed: 8-QAM, 8-3D-constellation, 64-QAM, 64-3D-constellation, 256-QAM, 256-3D-constellation, and 1024-3D-constellation. The 3D-constellations dimensions M are selected to be power of 2, and we choose the number of h layers to be a multiple of 2, and w points per layer to be a perfect square. For instance, in case of 64-ary, the constellation has four layers of 16 points each, providing the maximum separation distance among the points. For the other two cases, $h \times w$ are 4×64 and 16×64 for the 256-ary, and the 1024-ary signal constellations, respectively. The number of amplitude layers h was chosen to be small in order to preserve the circuit linearity.

Fig. 3 shows the BER performance versus the optical-signal-to-noise ratio (OSNR) at a symbol rate of 40 giga-symbols/s for the four 3-D cases after five outer iterations in addition to the uncoded cases.

Fig. 4 shows the BER performance versus OSNR at a symbol rate of 40 giga-symbols/s for the 2D, 3-D cases after 5 outer iterations, and two of the 3-D cases after 1 outer iteration.

Notice that, as the constellation size grows, the 3D-constellation BER performance improvement over corresponding 2D-constellation increases, reaching even 4.1-dB gain in the case of the 256-3D-constellation at BER of 10^{-9}. These results motivated us to test the 1024-3D-constellation, which is not practical at all in the 2-D case, and interestingly, the results indicate that if compared to the 64-3D-constellation, a 16 times increase in data rate causes only a penalty of 8 dB.

Notice that lowering the number of outer iterations reduces the latency, but that would be at the cost of reducing the coding gain. For instance, reducing the number of outer iterations from 5 to 1 in the case of 256-ary lowers the coding gain by 0.6 dB at BER 10^{-9}, while it lowers the gain by 1.5 dB for the 1024-ary.

The net effective coding gains (defined at BER of 10^{-9}) for 64-QAM and 256-QAM 2D-constellations are 9.5 and 10 dB, respectively. The corresponding coding gains for 3D-constellations are 10.5 and 14 dB, respectively. It is important to notice that the results achieved for both the coded and the uncoded modulation are in accordance with the channel capacity figure [9, Fig. 5.2-17], taking into consideration the difference between the electrical signal-to-noise ratio and the OSNR. Even though the current coding gains are approaching the capacity curves from the figure, there is some space for improvement remaining.

IV. Conclusion

A novel LDPC-coded 3-D modulation scheme is proposed. It is based on multilevel square QAM constellations to increase the efficiency and improve the BER performance of any M-ary 2D-modulation. The receiver is based on the APP demapper, and LDPC decoder.

The proposed scheme is suitable for 100G Ethernet in addition to high-speed optical transmission beyond 320-Gb/s aggregate rate. Once 100-Gb/s technology becomes mature enough, by using LDPC-coded 1024-3D-constellation, it is even possible to achieve beyond 1-Tb/s aggregate rate of optical transmission using 100-giga-symbols/s equipment. This option might be attractive for future 1-Tb/s Ethernet.

References

[1] I. B. Djordjevic, S. Sankaranarayanan, S. K. Chilappagari, and B. Vasic, "Low-density parity-check codes for 40-Gb/s optical transmission systems," *IEEE J. Sel. Topics Quantum Electron.*, vol. 12, no. 4, pp. 555–562, Jul./Aug. 2006.

[2] B. Vasic, I. B. Djordjevic, and R. Kostuk, "Low-density parity check codes and iterative decoding for long-haul optical communication systems," *J. Lightw. Technol.*, vol. 21, no. 2, pp. 438–446, Feb. 2003.

[3] H. Xiao-Yu, E. Eleftheriou, D. M. Arnold, and A. Dholakia, "Efficient implementations of the sum-product algorithm for decoding LDPC codes," in *Proc. IEEE Globecom*, Nov. 2001, vol. 2, pp. 1036–1036E.

[4] A. Zapata, M. Duser, J. Spencer, P. Bayvel, I. de Miguel, D. Breuer, N. Hanik, and A. Gladisch, "Next-generation 100-gigabit metro ethernet (100 GbME) using multiwavelength optical rings," *J. Lightw. Technol.*, vol. 22, no. 11, pp. 2420–2434, Nov. 2004.

[5] G. Raybon, P. J. Winzer, and C. R. Doerr, "10 × 107-Gbit/s electronically multiplexed and optically equalized NRZ transmission over 400 km," presented at the Proc. OFC, Anaheim, CA, Mar. 5–10, 2006, Postdeadline paper PDP32.

[6] I. B. Djordjevic, M. Cvijetic, L. Xu, and T. Wang, "Proposal for beyond 100-Gb/s optical transmission based on bit-interleaved LDPC-coded modulation," *IEEE Photon. Technol. Lett.*, vol. 19, no. 12, pp. 874–876, Jun. 15, 2007.

[7] S. T. Brink, G. Kramer, and A. Ashikhmin, "Design of low-density parity-check codes for modulation and detection," *IEEE Trans. Commun.*, vol. 52, no. 4, pp. 670–678, Apr. 2004.

[8] I. B. Djordjevic and B. Vasic, "Multilevel coding in M-ary DPSK/differential QAM high-speed optical transmission with direct detection," *J. Lightw. Technol.*, vol. 24, no. 1, pp. 420–428, Jan. 2006.

[9] J. G. Proakis, *Digital Communications*. Boston, MA: McGraw Hill, 2000.